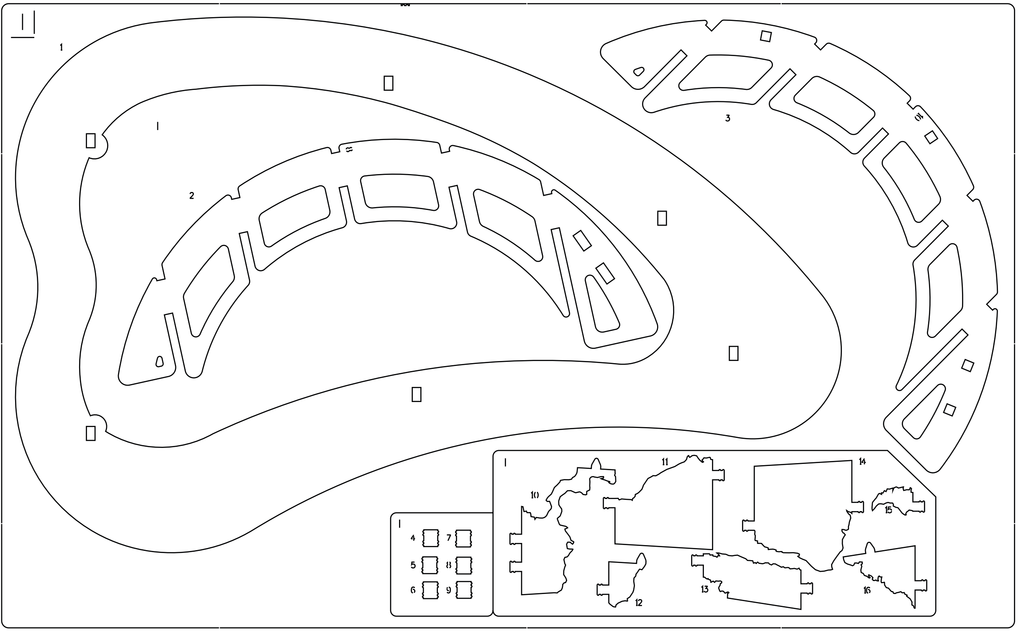
I

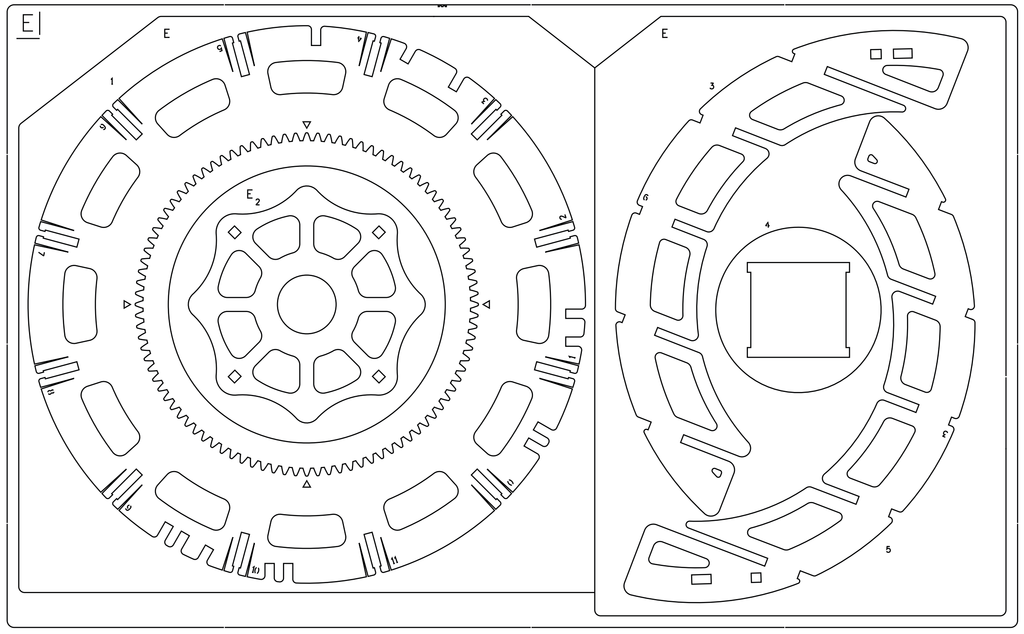
E

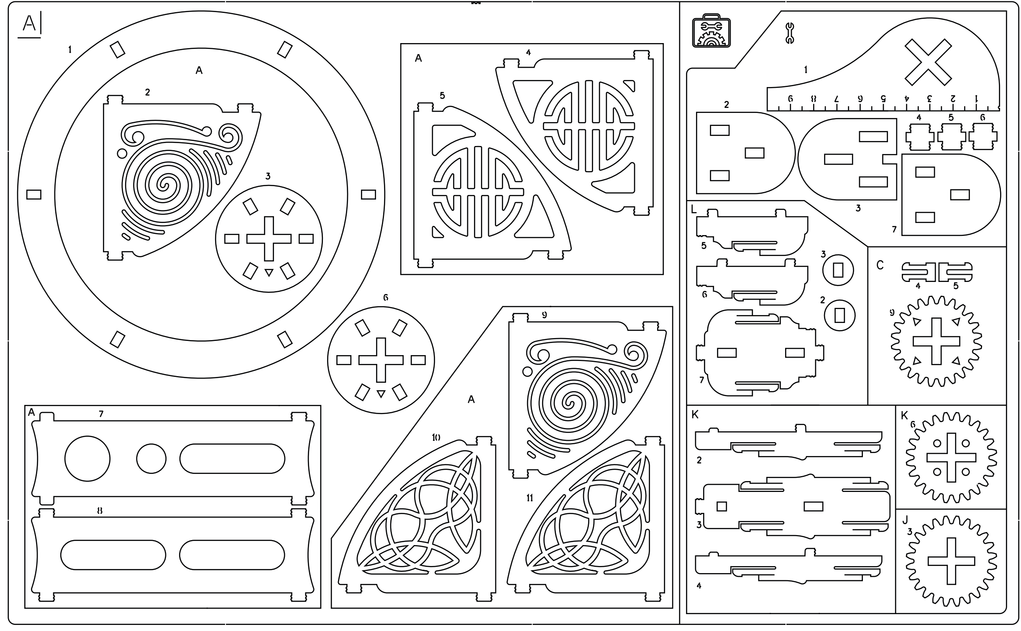
A

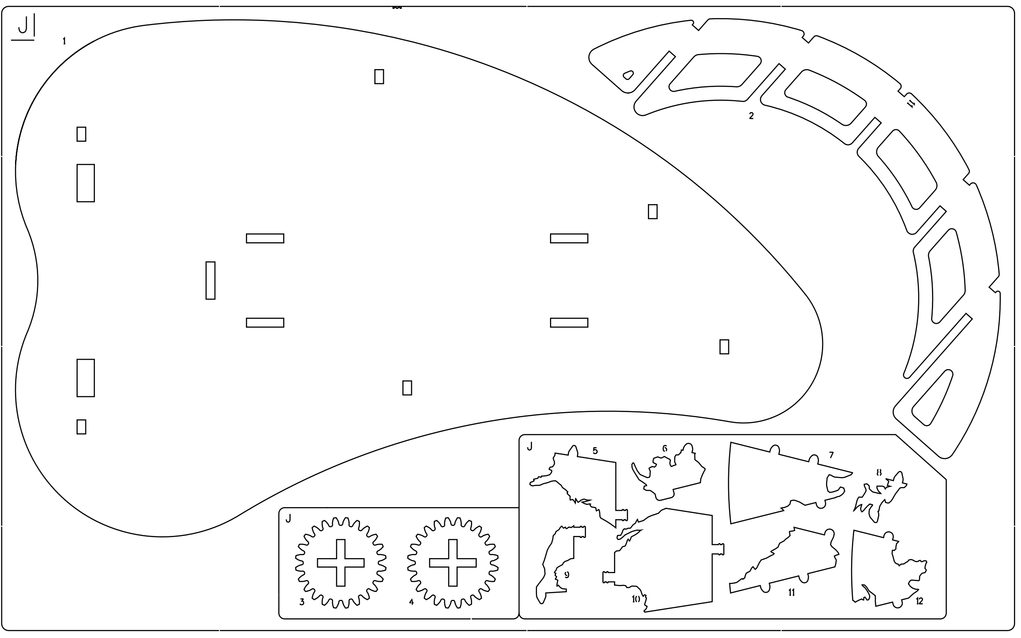
J

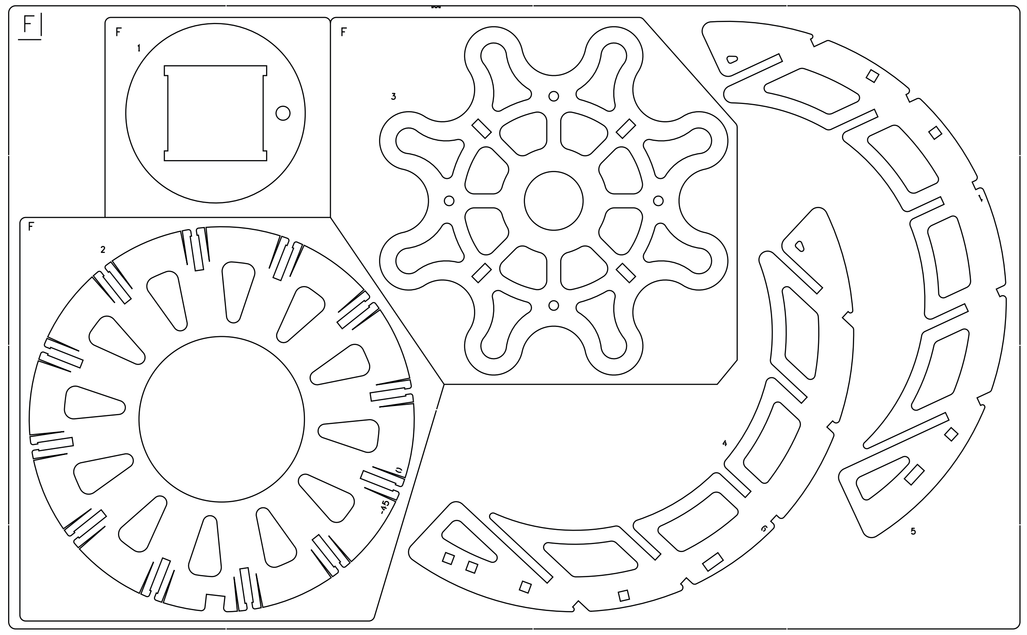
F

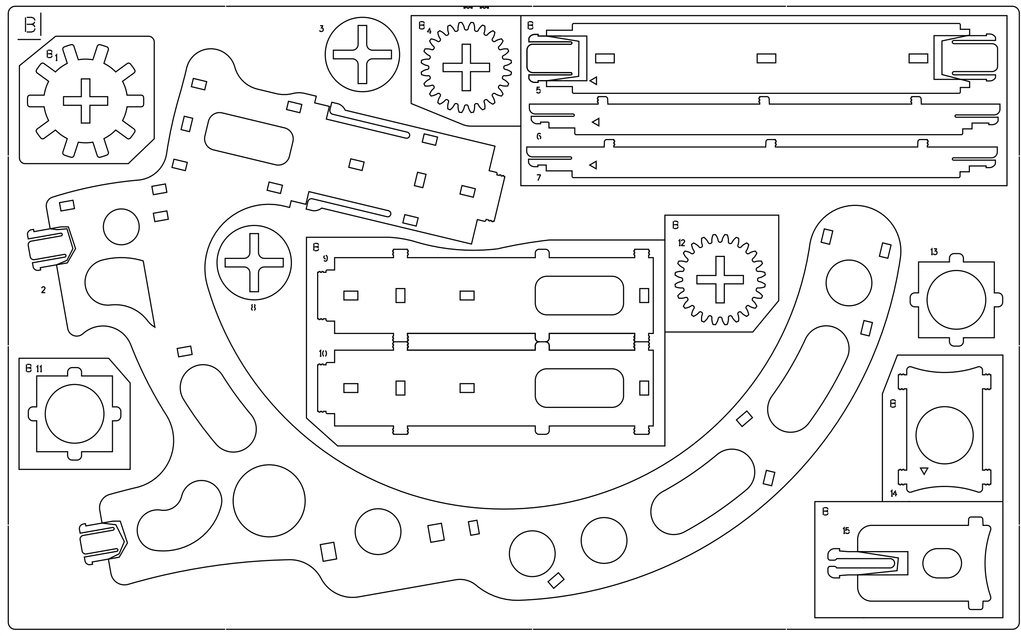
B

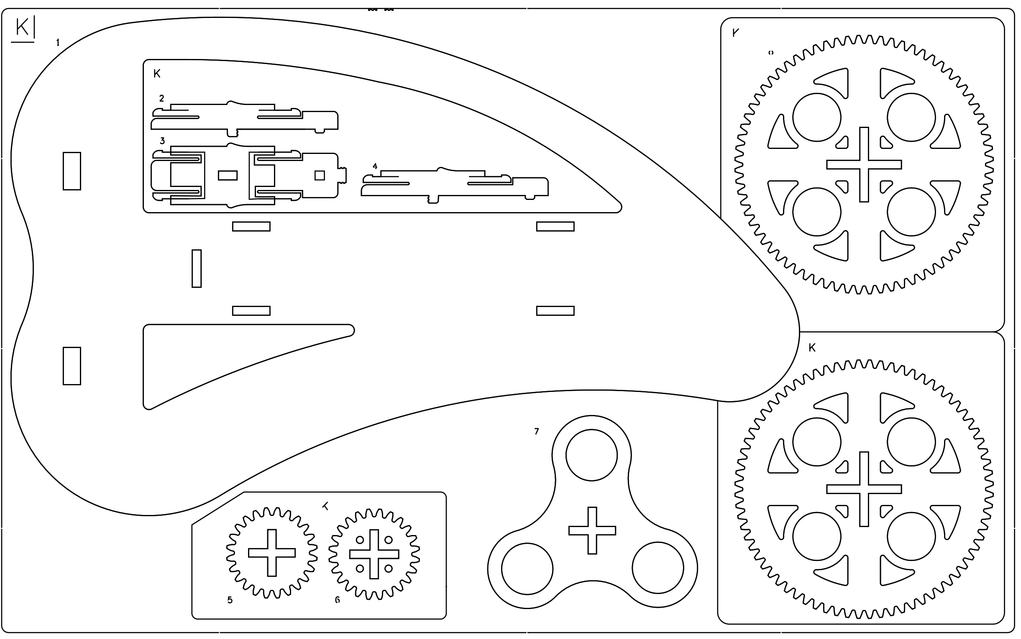
K

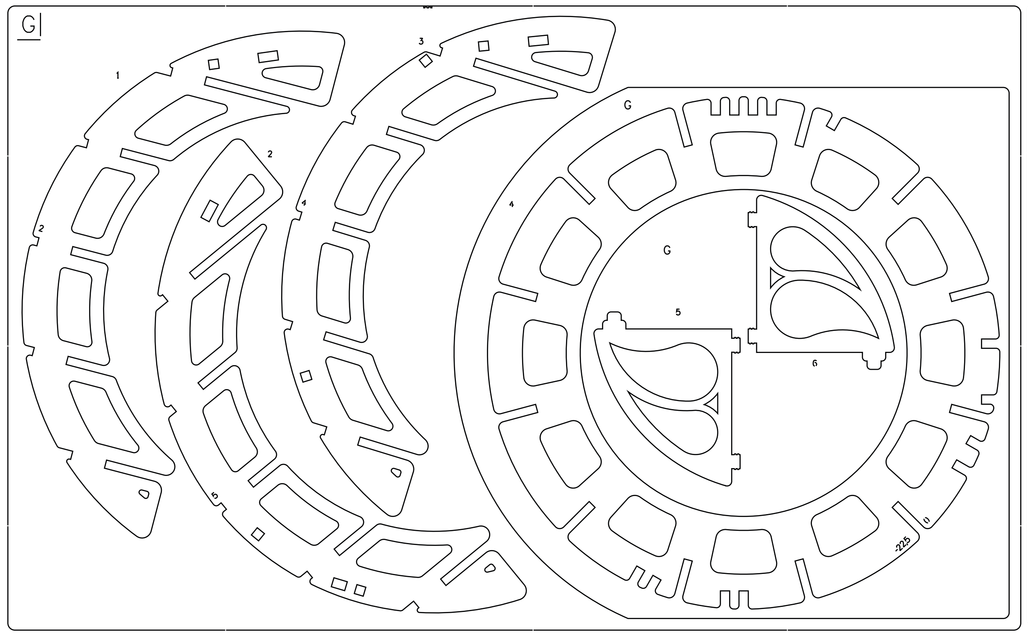
G

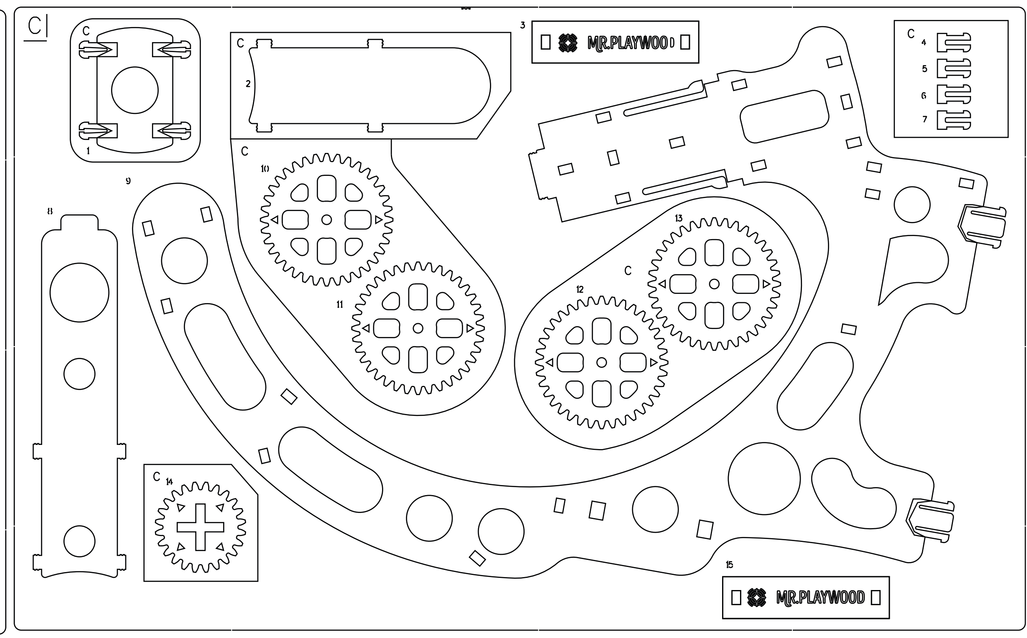
C
MR.PLAYWOOD
MR.PLAYWOOD

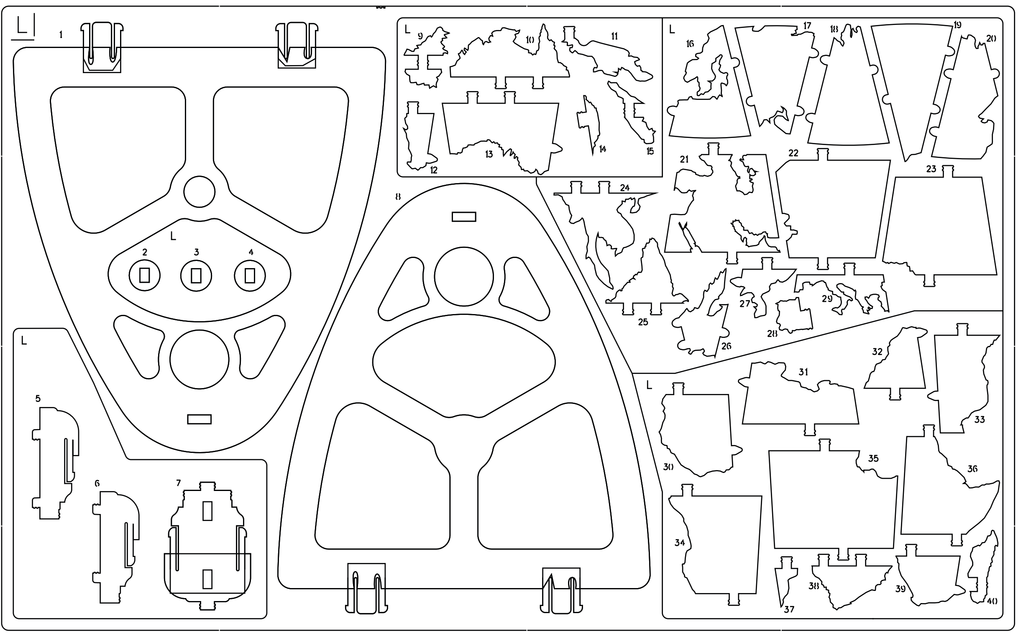
L

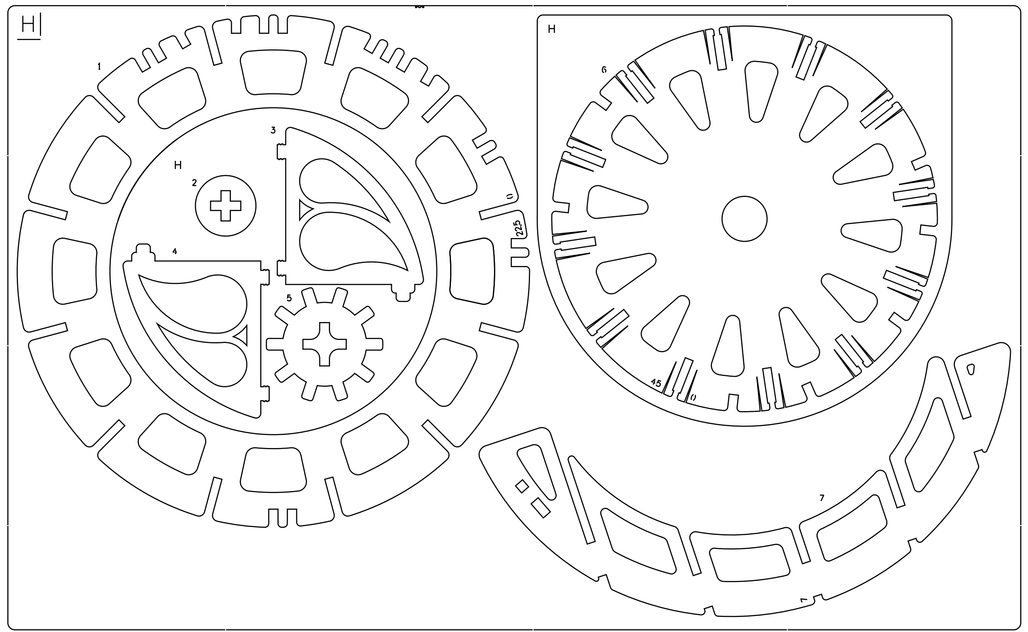
H

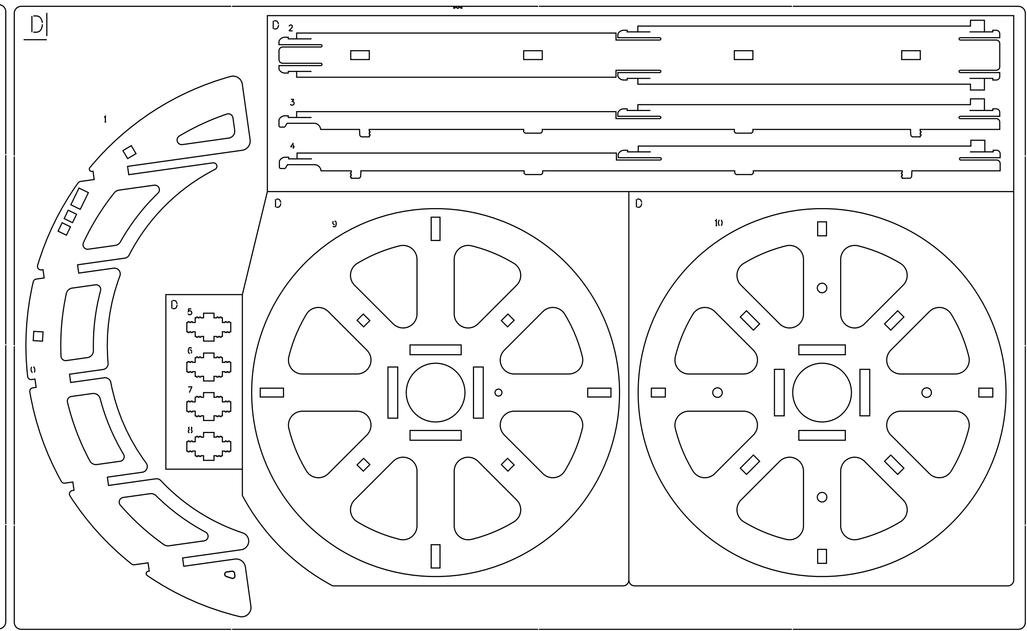
D